Customer code:	NONE	Part number:	MHV-P-4-CLAMP	Rev:	A

Changing log

Rev.	ECN#	Description	Changed by	Date
A	NONE	FIRST RELEASE.	M.YANG	2025-02-21

NOTE:
1 ELECTRICAL CHARACTERISTICS:
  1.1 IMPEDANCE: 50Ω
  1.2 FREQUENCY RANGE: 300MHz
  1.3 VSWR: 1.6 MAX.
  1.4 OPERATING VOLTAGE: AC 1500V RMS
2 MECHANICAL CHARACTERISTICS:
  2.1 TEMPERATURE RANGE: -65°C~+165°C
  2.2 DURABILITY: 500 CYCLES.
3 ALL MATERIALS AND PROCESS ARE RoHS COMPLIANT

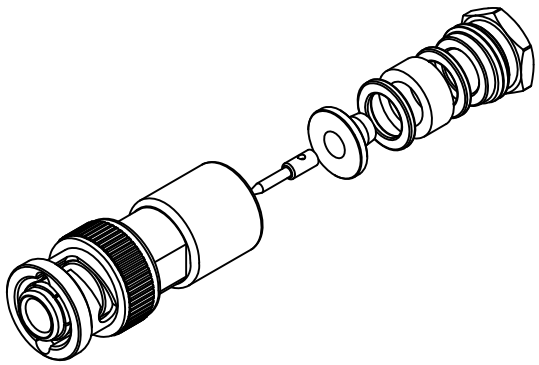

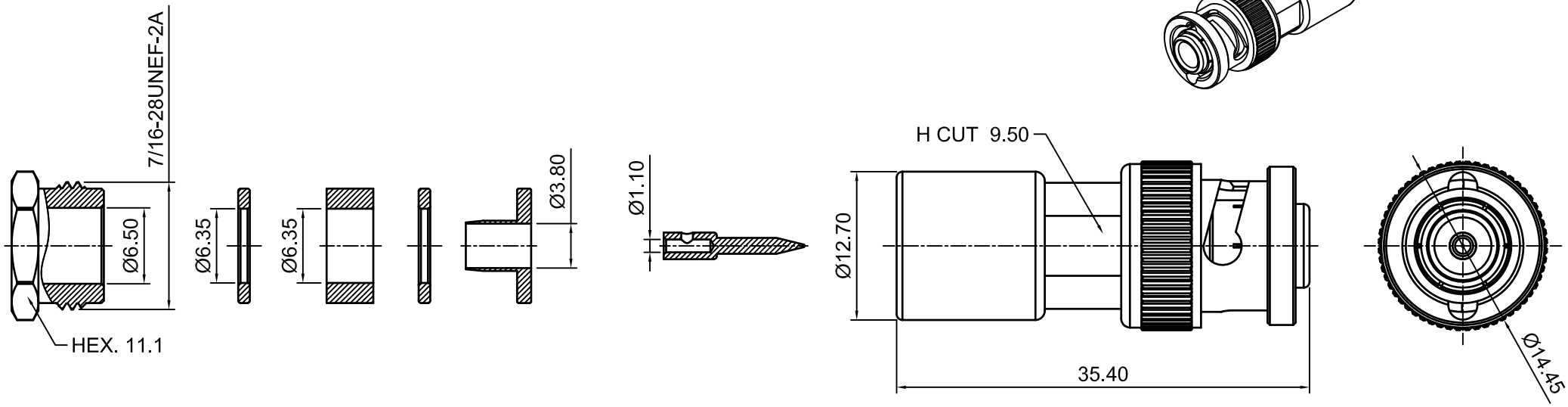

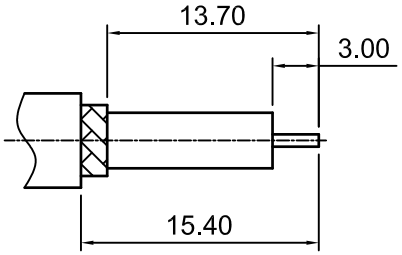

RECOMMENDED STRIP DIMENSION

ITEM	NAME	MATERIAL	TREATMENT	QTY
12	HEX. NUT	BRASS	NICKEL	1EA
11	FLAT WASHER	BRASS	NICKEL	2EA
10	GASKET	SILICONE RUBBER	NATURAL	1EA
9	CLAMP	BRASS	NICKEL	1EA
8	CONTAC PIN	BRASS	GOLD	1EA
7	GASKET	SILICONE RUBBER	NATURAL	1EA
6	FLAT WASHER	STEEL	NICKEL	1EA
5	SPRING	PIANO WIRE	NICKEL	1EA
4	C-RING	BRASS	NICKEL	1EA
3	INSULATOR	TEFLON	NATURAL	1EA
2	BODY	BRASS	NICKEL	1EA
1	BAYONET SLEEVE	BRASS	NICKEL	1EA

Bill Of Material

TOLERANCES UNLESS OTHERWISE SPECIFIED		
ONE PLACE DECIMAL	.X	±0.20
TWO PLACE DECIMAL	.XX	±0.10
THREE PLACE DECIMAL	.XXX	±0.02
HOLE DIA. VARIATION	.XX	N/A
ANGULAR DIMENSION		±3°

Signature	
Approved By:	
Checked By:	
Drawn By:	

SHINTO ELECTRONICS CO.,LTD
http://www.shinto-electronics.com

Shinto P/N:	MHV-P-4-CLAMP		
Description:	MHV PLUG STRAIGHT FOR RG59 CABLE		
Material:	See BOM	Treatment:	See BOM
Unit: mm	Size: A4	Scale: 2:1	Sheet: 1 of 1

THE INFORMATION CONTAINED HEREIN IS PROPRIETARY TO SHINTO.ANY USE OR DISCLOSURE OF THIS INFORMATION,EXCEPT FOR THE EXCLUSIVE BENEFIT OF SHINTO IS PROHIBITED.