Customer code:	NONE	Part number:	SPFS10G178-A488	Rev:	C

Changing log

Rev.	ECN#	Description	Changed by	Date
A	NONE	FIRST RELEASE.	M.YANG	2023-06-09
B	NONE	ADDITION THE CABLE INFORMATION.	M.YANG	2024-06-11
C	NONE	NEW SHAPE AS THE SAMPLE.	M.YANG	2024-06-24

NOTE:

1. ELECTRICAL CHARACTERISTICS:
   - 1.1 IMPEDANCE 50Ω
   - 1.2 FREQUENCY RANGE: DC~1.2 GHz
   - 1.3 VSWR:1.08 MAX.
   - 1.4 INSULATION RESISTANCE: 1000MΩ MIN.
   - 1.5 CONTACT RESISTANCE
     - 1.5.1 CENTER CONTACT: 5.0 mΩ
     - 1.5.2 OUTER CONTACT: 1.0 mΩ
2. MECHANICAL CHARACTERISTICS:
   - 2.1 MECHANICAL INTERFACE ACCORDING MIL-STD-348B.
   - 2.2 TEMPERATURE RANGE: -65°C~+165°C
3. ALL MATERIALS AND PROCESS ARE RoHS COMPLIANT.

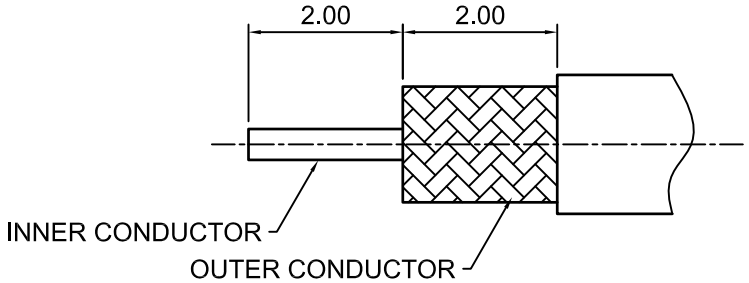

RECOMMENDED CABLE STRIPPING DIMENSION

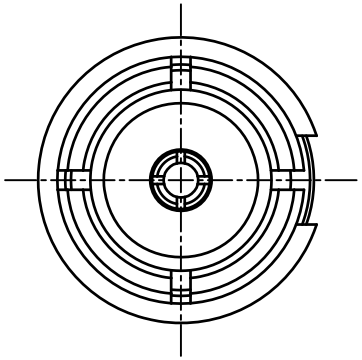

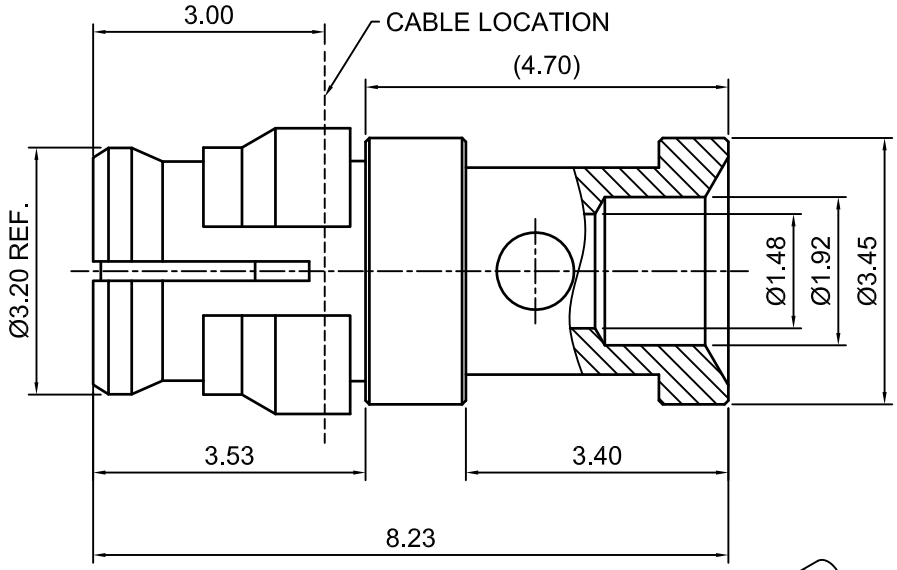

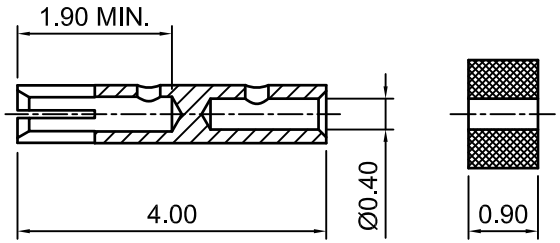

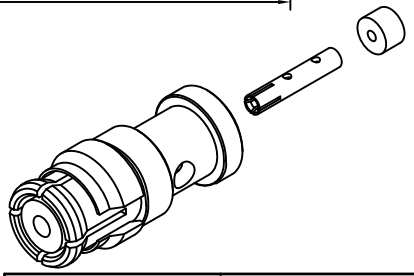

ITEM	NAME	MATERIAL	TREATMENT	QTY
5	SPACER	TEFLON	NATURAL	1 EA
4	C-RING	BERYLLIUM COPPER	GOLD	1 EA
3	CONTACT	BERYLLIUM COPPER	GOLD	1 EA
2	INSULATOR	TEFLON	NATURAL	1 EA
1	BODY	BERYLLIUM COPPER	GOLD	1 EA

Bill Of Material

TOLERANCES UNLESS OTHERWISE SPECIFIED		
ONE PLACE DECIMAL	.X	±0.2
TWO PLACE DECIMAL	.XX	±0.1
THREE PLACE DECIMAL	.XXX	N/A
HOLE DIA. VARIATION	.XX	N/A
ANGULAR DIMENSION		±2°

Signature	
Approved By:	
Checked By:	
Drawn By:	M.YANG

SHINTO ELECTRONICS CO.,LTD
http://www.shinto-electronics.com

Shinto P/N: SPFS10G178-A488

Description: SMP JACK STRAIGHT FOR RG178 CABLE

Material: SEE BOM | Treatment: SEE BOM

Unit: mm | Size: A4 | Scale: 10:1 | Sheet: 1 of 1

THE INFORMATION CONTAINED HEREIN IS PROPRIETARY TO SHINTO.ANY USE OR DISCLOSURE OF THIS INFORMATION,EXCEPT FOR THE EXCLUSIVE BENEFIT OF SHINTO IS PROHIBITED.